Type J PVC Insulated Flat Pair Thermocouple Cable / Wire (IEC) - 7/0.2mm

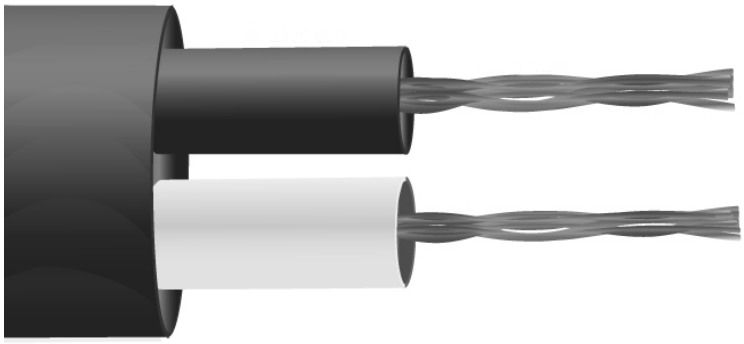



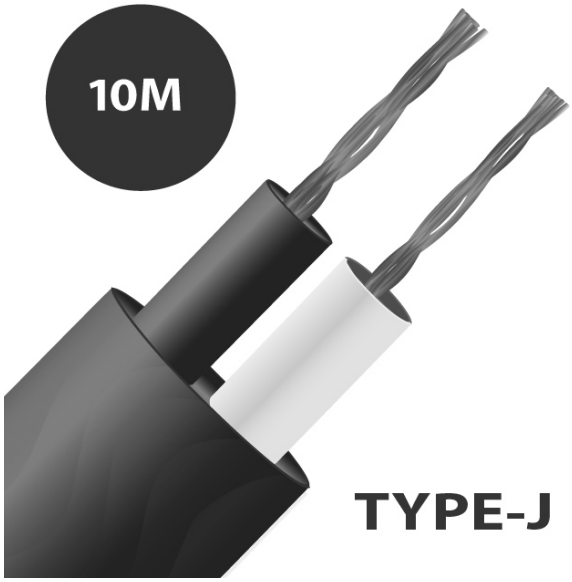

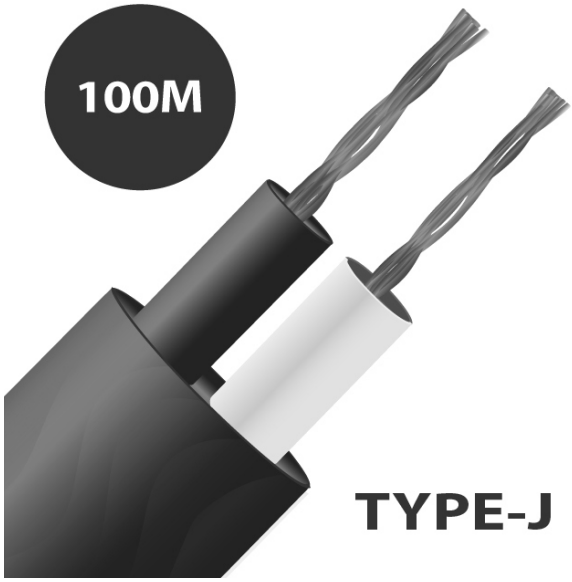

Labfacility are the UK's leading manufacturer of Temperature Sensors, Thermocouple Connectors and associated Temperature Instrumentation and stockings of Thermocouple Cables. The Company has been trading since 1971 and is ISO9001 accredited.

LABFACILITY
TEMPERATURE & PROCESS TECHNOLOGY

Datasheet

Buy direct from Labfacility in reel lengths up to 200 m
For longer lengths, you can order 300m and 500m reels from Farnell, click the Farnell logo on the product page to see buying options.

Specifications

General Description	Good general purpose insulation for 'light' environments. Waterproof and very flexible.
Cable Length	10, 25, 50, 100 & 200m
Cable Type	Flat pair construction
Core / Strands	7/0.2mm
Conductor Cross Section 7/0.2 (mm2)	0.219
Outer Colour	Black
+ Colour	Black
- Colour	White
Drain Wire	No
Insulation Material	PVC Insulated
Loop Resistance 7/0.2 (Ohms per combined metre)	2.7
Max. Temperature	+105°C
Min. Temperature	-10°C
+ Conductor	Iron
- Conductor	Constantan
Screen	No

Standards Met	Colour code (cores & jacket) to IEC-584-3
Thermocouple Type	J
Tolerance	Class 2